WARRICK COUNTY HIGHWAY ENGINEER

107 WEST LOCUST STREET, COURTHOUSE, ROOM 208, BOONVILLE, IN 47601
PHONE (812) 897-6094 – FAX (812) 897-6109

Application for Roadside Ditch Enclosure Permit

Applicants Name: _____

Current Address: _____ P.O. Box: _____

City: _____ State: _____ Zip: _____

Submittal Date: _____ Call/Email _____

Initials _____

Provide a sketch of the ditch location in relation to the property lines and nearest intersection.

Indicate North

along the [ ]N [ ]S [ ]E [ ]W

Issue Date: _____ Pipe Size: _____ Permit # _____

Other conditions/comments: _____

_____

_____

WARRICK COUNTY HIGHWAY ENGINEER

107 West Locust Street, Courthouse Room 208 - Boonville, IN. 47601
PHONE (812) 897-6094 FAX (812) 897-6109

Permit Number: _____

General Specifications for Roadside Ditch Enclosure:

1. All Ditch Enclosures must be approved by the Warrick County Highway Engineering Dept.
2. The Culvert should be installed and backfilled with a swale that is at least 6 inches lower than the edge of pavement. (See attached Detail Drawing)
3. An appropriate number of inlets should be installed to divert water into the culvert and away from obstacles such as driveways.
4. The pipe that is installed should also have a minimum of 12 inches of cover fill.
5. If using plastic pipe only rigid plastic is to be used, flexible pipe is NOT permitted.
6. All structures in the enclosed ditch are to be maintained by the owner. Warrick County will not maintain these structures.
7. Warrick County reserves the right to remove the structure and leave an open ditch if they fail for any reason and/or water compromises the roadway.
8. A minimum pipe size of 12-inch diameter is required.
9. The size of pipe needed will be determined by the Warrick County Highway Engineering Dept.

Note: If these designs parameters and specifications for roadside ditch enclosures cannot be met, ditch enclosure shall not be performed.

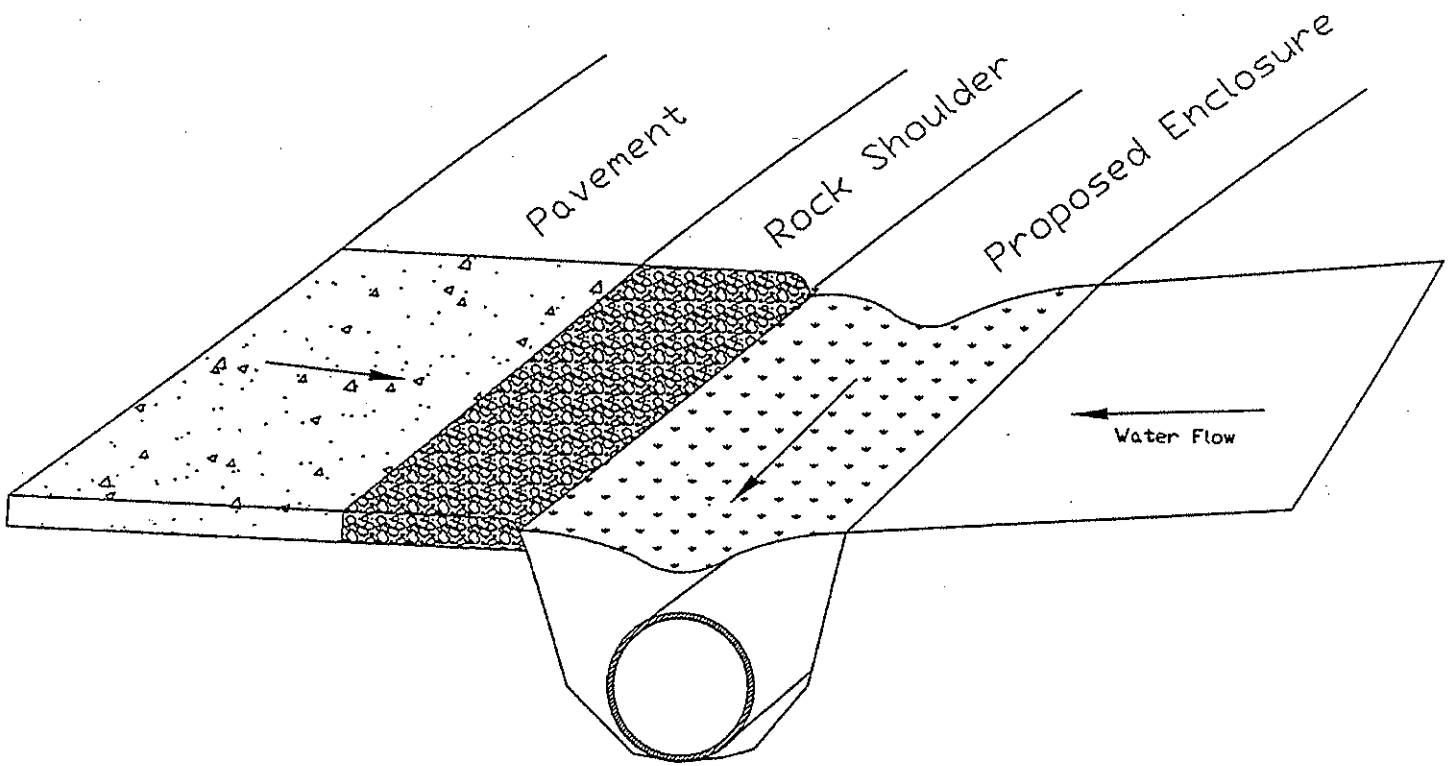

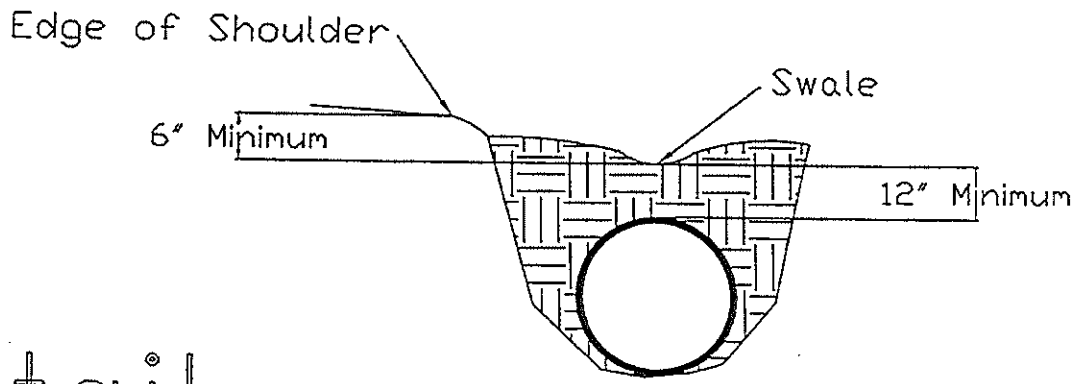

Cross-Section

*NOTE: Pipe Size to be determined by Warrick County Hwy. Engineering Dept. (DO NOT SCALE)

Typical Ditch Enclosure Detail

Warrick County Highway Engineering Dept.